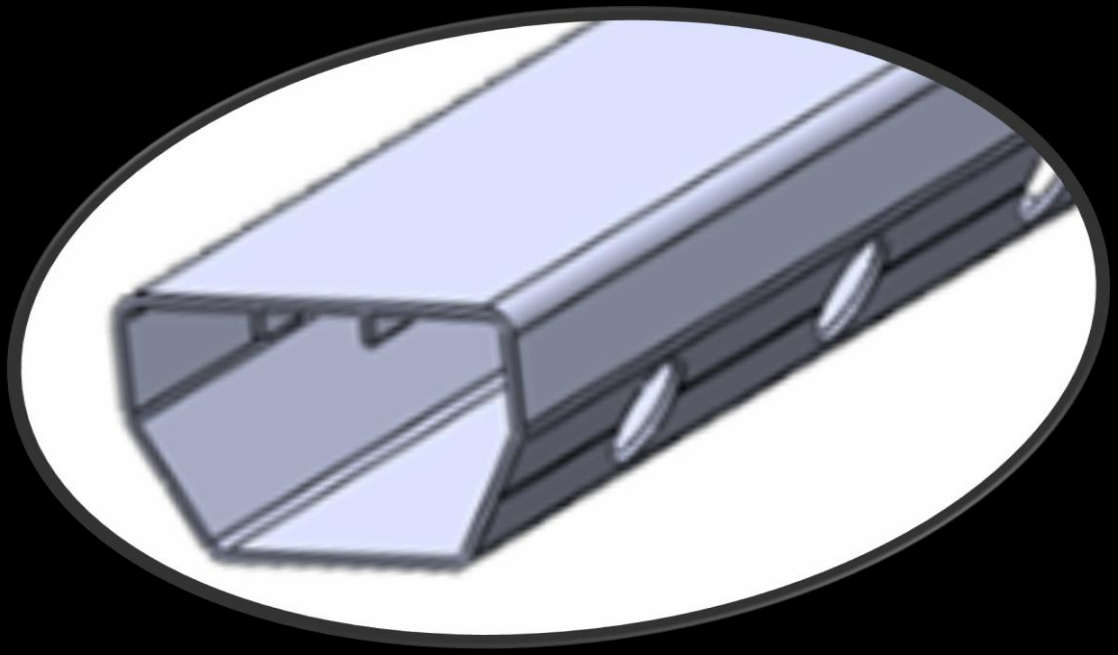

ABS BASE-DRAIN

Probably The Most Advanced Basement Drainage System in the world…

Basement Waterproofing? Think ‘Base-Drain...’

Designed ***IN*** the 21st Century
FOR the 21st Century...

Copyright Advanced Basement Solutions Ltd 2012 - Patent Pending www.absorders.com Tel USA 860 910 0785 UK 0800 413 801

What makes Base-Drain Unique?

ABS Base-Drain is the ONLY Basement Drainage Channel to combine ALL of the features listed below…

- Anti-Microbial Additive to prevent bacterial slime build up inside the channel

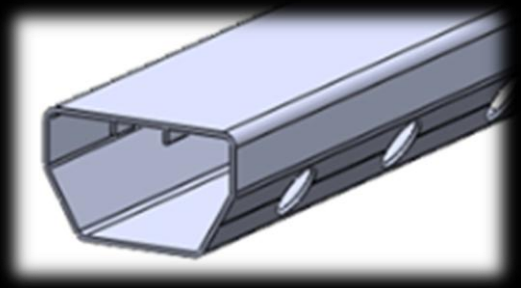

- Holes on ***BOTH*** sides to maximise water flow

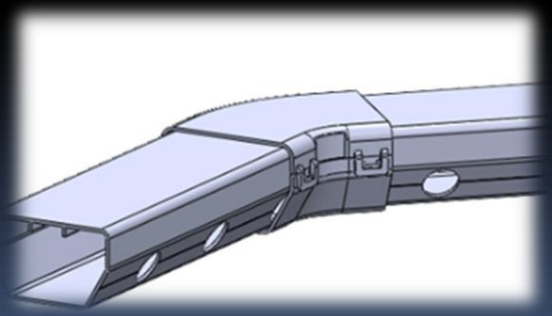

- Curved corners to assist water flow and clean out

Copyright Advanced Basement Solutions Ltd 2012 - Patent Pending www.absorders.com Tel USA 860 910 0785 UK 0800 413 801

What makes Base-Drain Unique?

Some of the special features of Base-Drain can be found in other systems - but ***NOT*** all together…

- Inspection ports have telescopic adjustment so that they can be aligned precisely with the floor at each location

- Port lids are attached by a flexible hinge to prevent them from being mislaid and lost

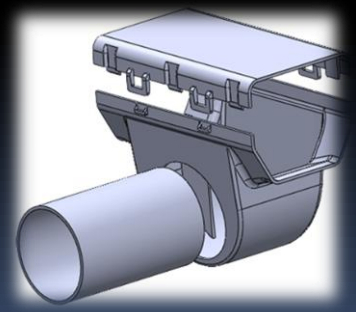

- Three dimensional drain outlet to allow efficient drain – down into the sump pit

Copyright Advanced Basement Solutions Ltd 2012 - Patent Pending www.absorders.com Tel USA 860 910 0785 UK 0800 413 801

What makes Base-Drain Unique?

- Optional Flexible flange to allow independent alignment of channel and flange

- Flange design allows water from the wall to enter but restricts escape of vapour

- May be placed ON the footer or IN FRONT of the footer

- Optional Flo-guard to connect wall-footing joint to the channel when placed in front of the footer

Copyright Advanced Basement Solutions Ltd 2012 - Patent Pending www.absorders.com Tel USA 860 910 0785 UK 0800 413 801

ABS Base-Drain Technical Specifications

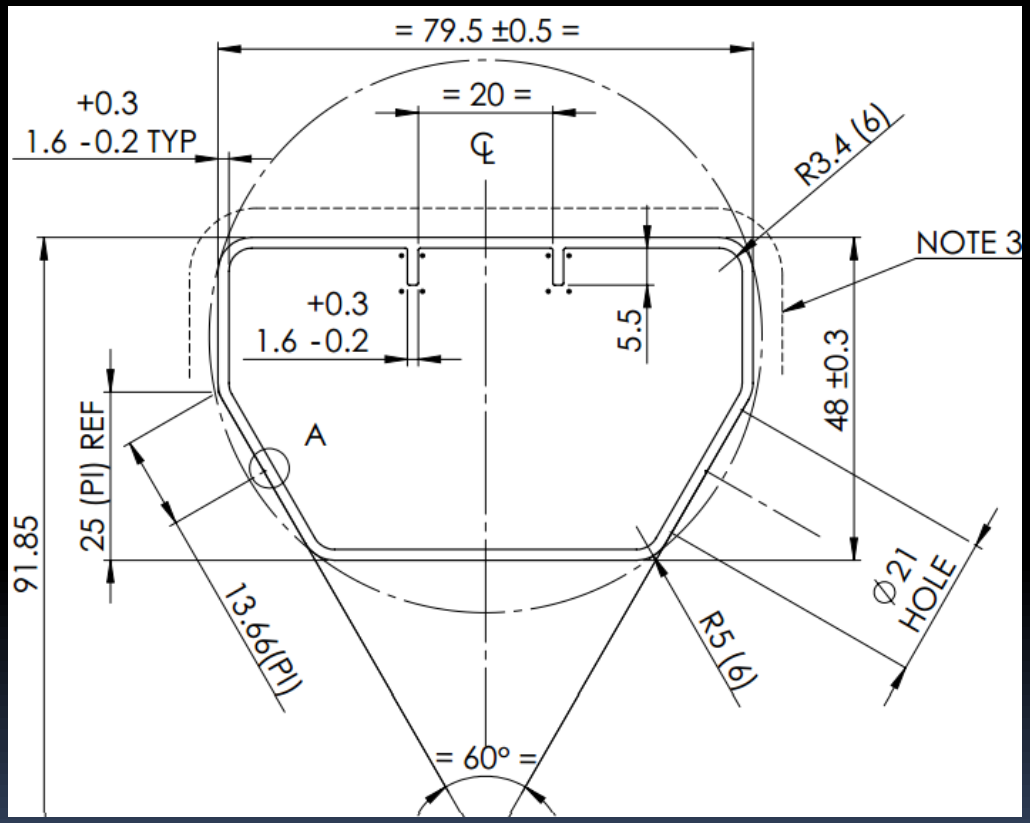

ABS Base-Drain is manufactured from high quality Virgin Polyvinyl Chloride (PVC) with a silver Nitrite Anti-Microbial Additive.

The cross sectional drawing opposite shows dimensions in millimetres. Each length is 2.18meters (7'6") long and it is supplied in separate lengths as well as boxes of 9 lengths (67'6")

Typically it may be installed on top of the footer, with or without the separate 'Flexi-Flange', or in front of the footer if the floor slab is less than 4" thick. together with Flo-Guard is then used to drain the water across the top of the footer to the Base-Drain Channel.

ABS Base-Drain is designed for use in finished or unfinished basements. When finishing works are planned it is recommended to be used in conjunction with Therma-Dry wall membrane (see Therma-Dry brochure).

A trench 4" (100mm) deep and between 5 – 6" (125 – 150mm) wide around the perimeter of the basement floor, with an additional notch 100mm deeper and 125mm long for the drain outlet to the sump pit. In larger basements and those with particularly high water ingress rates it is wise to install some Base-Drain channel across the floor in addition to the perimeter of the basement.

Accessories include: - mechanical clips which are used to join the Base-Drain lengths; inspection ports, to be placed in two diagonally opposite corners in-between two 45degree curved corner pieces. Ninety degree corners are made up from two 45's with a small piece of the Base-Drain channel to link them.

See separate Installation guide for further details. Technical assistance is available by telephone and e-mail. advancedbasementsolutionsltd@gmail.com

Copyright Advanced Basement Solutions Ltd 2012 - Patent Pending www.absorders.com Tel USA 860 910 0785 UK 0800 413 801

Typical installation for a finished Basement...

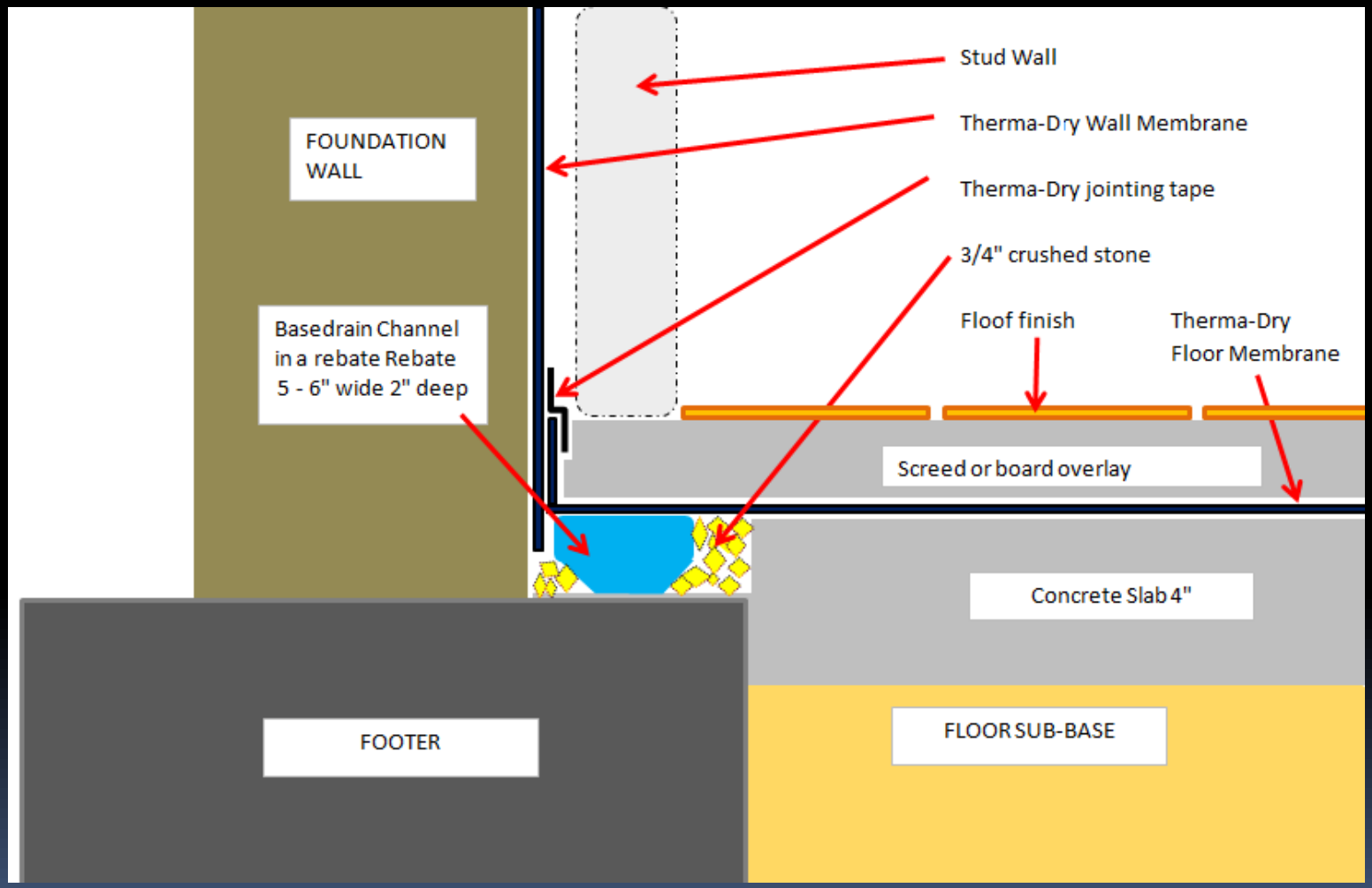

Copyright Advanced Basement Solutions Ltd 2012 - Patent Pending www.absorders.com Tel USA 860 910 0785 UK 0800 413 801

Typical installation for An un-finished Basement...

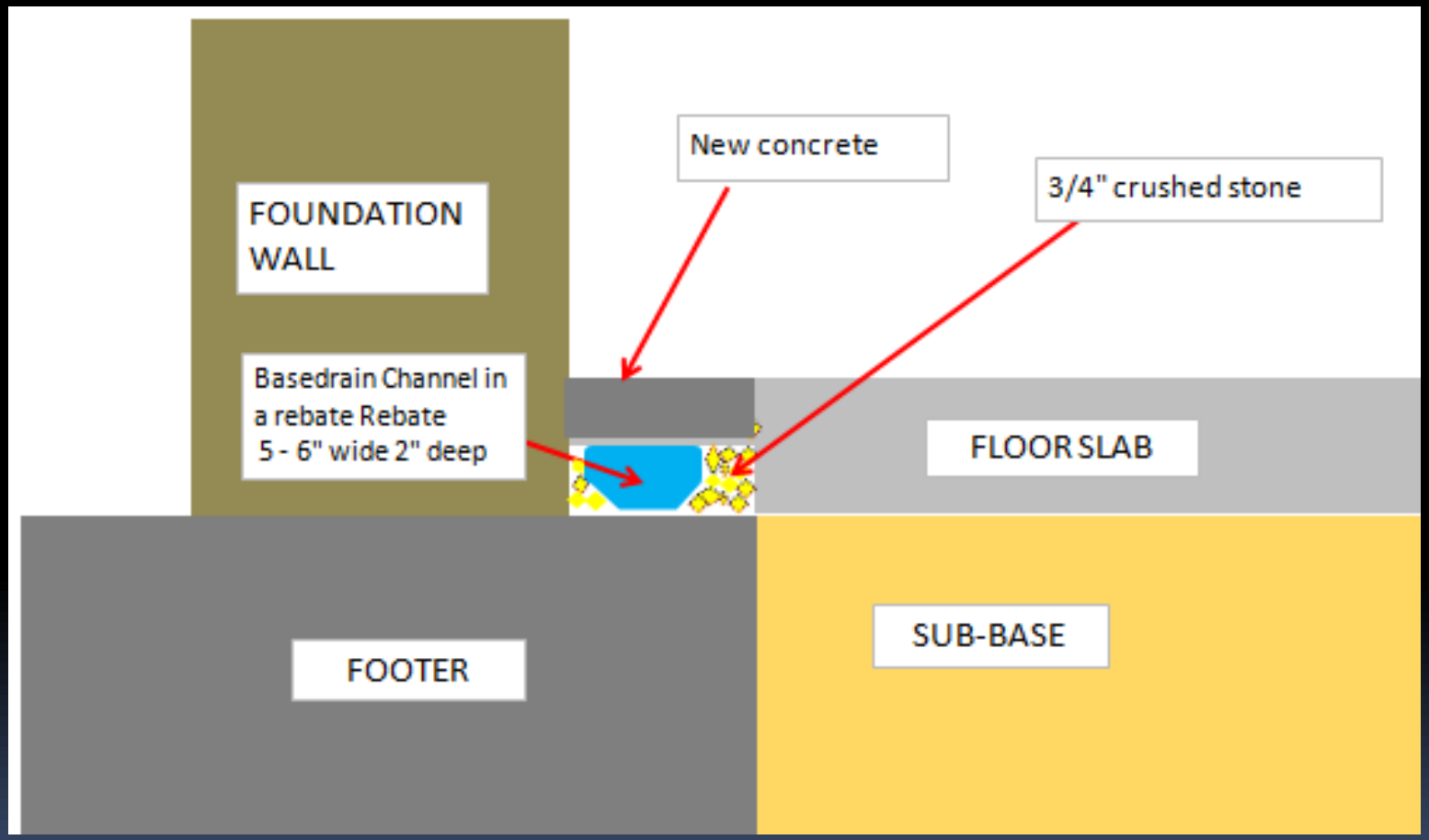

Copyright Advanced Basement Solutions Ltd 2012 - Patent Pending www.absorders.com Tel USA 860 910 0785 UK 0800 413 801